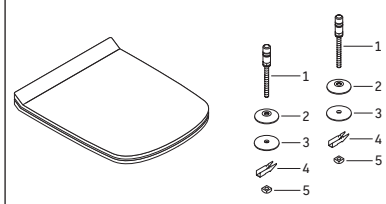


# 006051..00, # 006051..96
# 006059..00, # 006059..96
# 006371..94, # 006379..00

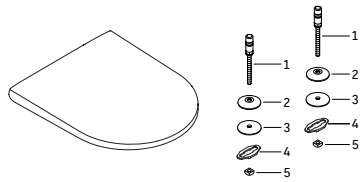


# 002611..00, # 002619..00
# 002161..00, # 002169..00

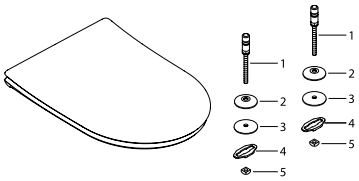


# 002231..00, # 002239..00
# 002641..00, # 002649..00

**1**

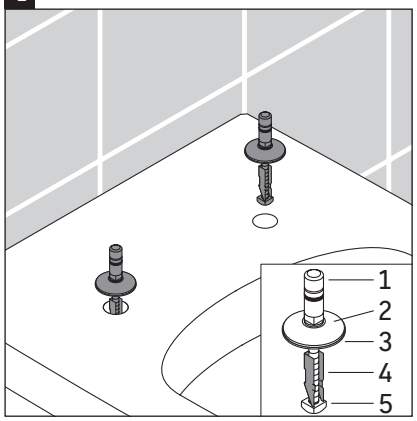


**2**

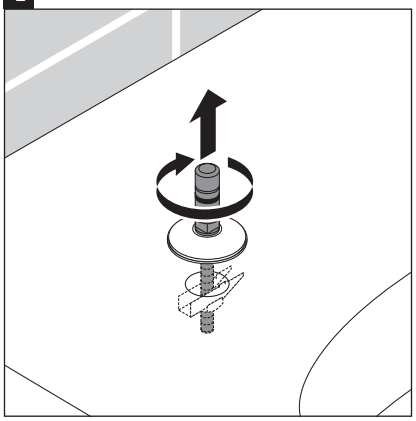

**3**

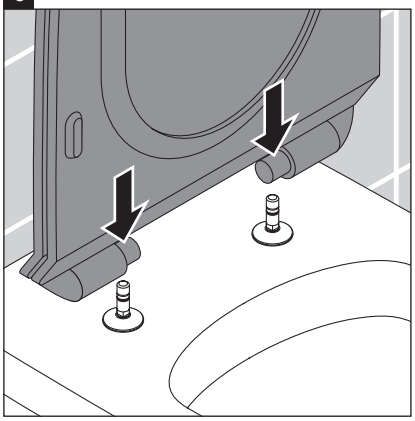

**4**

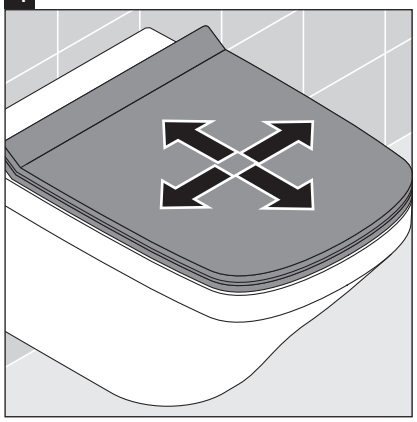

**5**

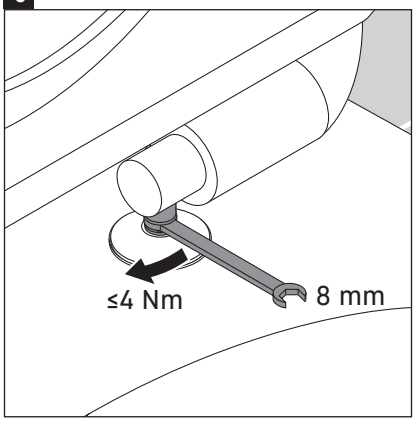


108718/MA211
Best.-Nr. 54063/221.8 We reserve the right to make technical improvements and enhance the appearance of the products shown.

**DURAVIT AG**, Werderstr. 36, 78132 Hornberg, Germany, Phone +49 78 33 700, Fax +49 78 33 70 289, info@duravit.de, www.duravit.de